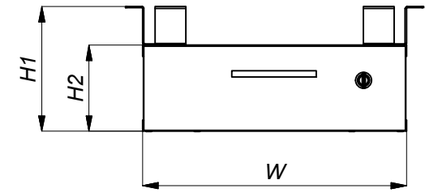


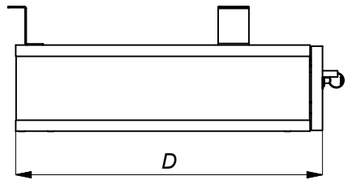


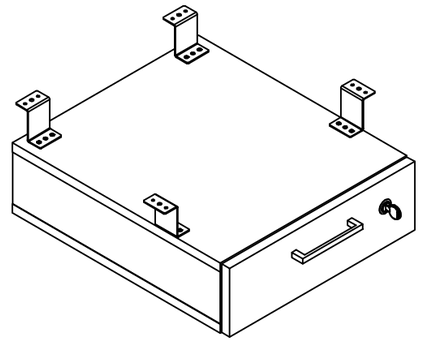

| Description | W (mm) | D (mm) | H1 (mm) | H2 (mm) |
|---|---|---|---|---|
| Hanging 1-Drawer Unit 430x500x203 | 430 | 500 | 203 | 140 |
| Hanging 2-Drawer unit 430x500x343 | 430 | 500 | 343 | 280 |
| Mobile 4-Drawer unit 430x500x630 | 430 | 500 | 630 | 560 |

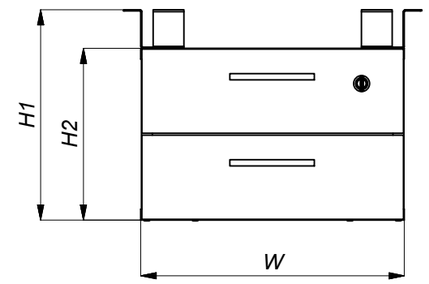


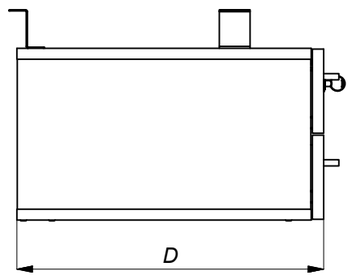


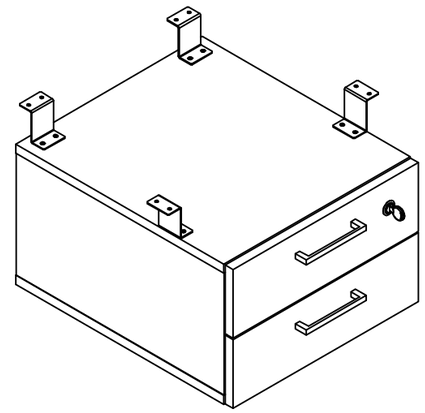

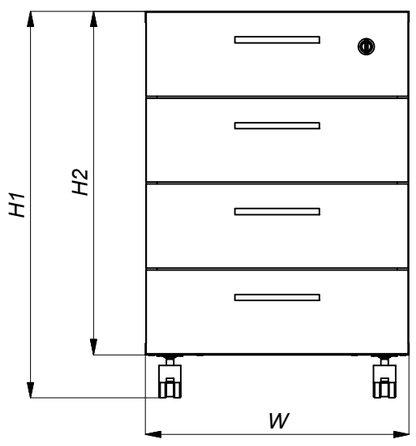


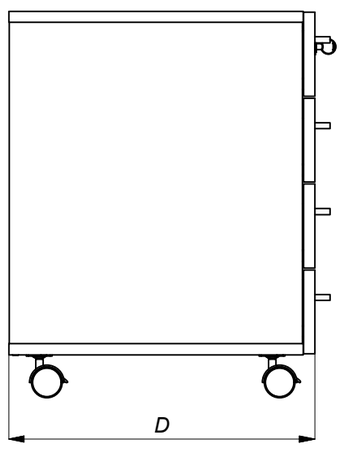


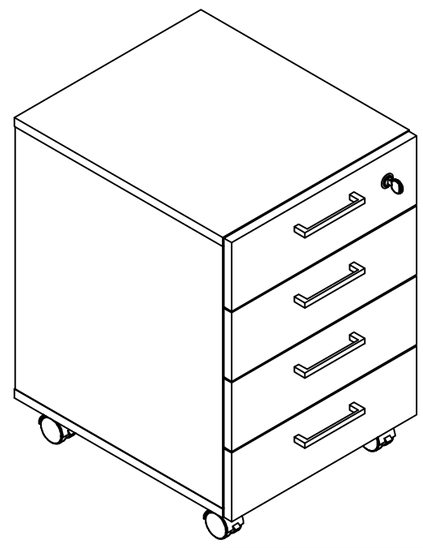

| | | | | | | |
|---|---|---|---|---|---|---|
| | | | | | Product name | |
| | | | | Date | UNIKA drawer units | |
| | | | | 2021-06-07 | | |
| | | | | | Measurements are in millimeters (mm) | |